NOTES: (UNLESS OTHERWISE SPECIFIED)

1. SPECIFICATIONS AND DOCUMENTS:
   1.1. PANEL CONSTRUCTION SHALL BE IAW OH-SPEC-001, PANEL TYPE A, METHOD 1.
   1.2. ELECTRICAL CONNECTIONS SHALL BE IAW OH-INTERCONNECT.

2. ALL ITEMS NOT EXPLICITLY DEFINED IN THIS DRAWING ARE DEFINED BY THE MASTER CAD MODELS. ALL DIMENSIONS NOT DEFINED ON THIS DRAWING ARE CONTAINED WITHIN THE FOLLOWING MANUFACTURING FILES:
   2.1. FLAT PARTS: <MATERIAL>_<MATERIAL COLOR, IF APPLICABLE>_<THICKNESS, IN DECIMAL INCHES>_<PN>_<DESCRIPTION>_<REV>_V<VERSION NUMBER OF MODEL>.SVG

3. FN 7 AND 14 ARE INCLUDED WITH THE RESPECTIVE SWITCHES, AND SHOULD NOT BE ORDERED SEPARATELY.

REVISION HISTORY			
REV	DESCRIPTION	DATE	APPROVED
-	INITIAL RELEASE	4/13/2023	
A	FIX #1150 - MAKE SPACE FOR HEX NUT AT ENG CRANK SWITCH. ADDED FN14; ADDED FN14 TO NOTE 3.	04/16/2026	

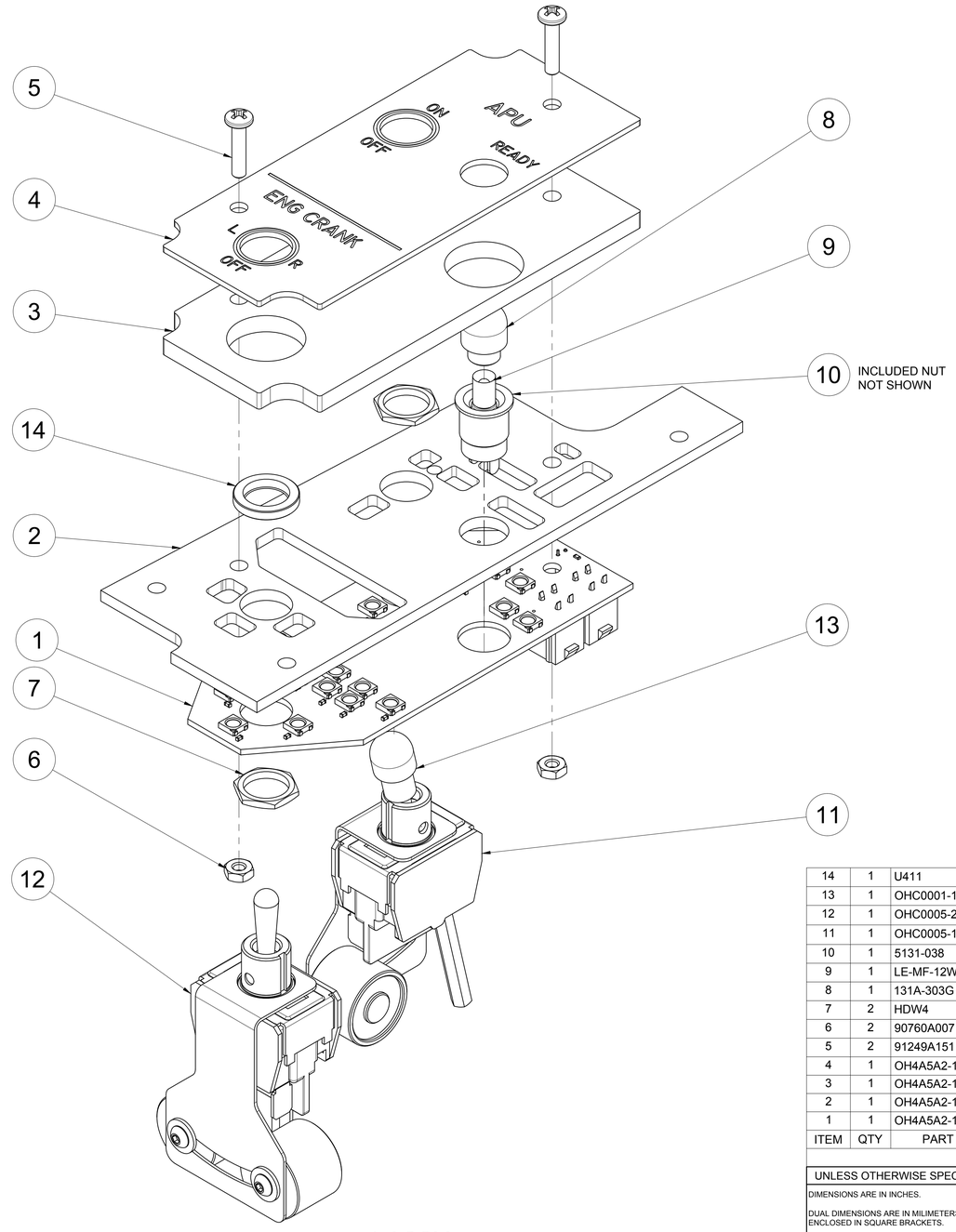

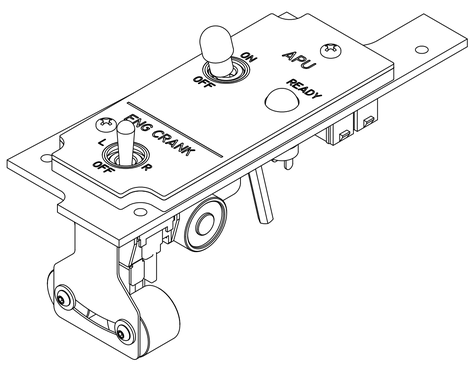

-1 ISO

-1 ASSY
SCALE 1.5:1

ITEM	QTY	PART NUMBER	DESCRIPTION	MATERIAL
14	1	U411	NUT, KNURLED, M12-0.75 X Ø16 X 2.5, STL, APEM	STL
13	1	OHC0001-10	BAT, ROUND, FOR NKK SXAL SWITCH	ALU
12	1	OHC0005-2	ASSY, SWITCH, MAGNETICALLY HELD, (ON)-OFF-(ON)	----
11	1	OHC0005-1	ASSY, SWITCH, MAGNETICALLY HELD, (ON)-ON	----
10	1	5131-038	HOLDER, LAMP, PANEL MOUNT, T1.75	N/A
9	1	LE-MF-12W	LED, T-1.75 MIDGET FLANGE LAMP, 12V ,15MA	N/A
8	1	131A-303G	LENS, GREEN, TRANSPARENT, T1.75 MIDGET FLANGE	N/A
7	2	HDW4	HEX NUT FOR SWITCH, 15/32-32NS	N/A
6	2	90760A007	NUT, JAM, #6-32, STEEL	STL
5	2	91249A151	PHS, #6-32 X .625, 18-8, BLK	SS
4	1	OH4A5A2-13	APU ENG CRANK LEGEND PLATE	RMRK
3	1	OH4A5A2-12	APU ENG CRANK LIGHTPLATE	ACRL
2	1	OH4A5A2-11	APU ENG CRANK BACKPLATE	ACRL
1	1	OH4A5A2-10	APU PANEL PCB V2	STEEL

PARTS LIST

UNLESS OTHERWISE SPECIFIED:

DIMENSIONS ARE IN INCHES.

DUAL DIMENSIONS ARE IN MILIMETERS AND ENCLOSED IN SQUARE BRACKETS.

INTERPRET DRAWING IAW ASME Y14.100-2017.

INTERPRET DIM AND TOL IAW ASME Y14.5-2009.

REMOVE ALL BURRS AND SHARP EDGES TO .05 MAX.

DIMENSIONS APPLY BEFORE FINISH.

UOS INCH TOLERANCES ARE:

DECIMALS:
.X ± .1
.XX ± .03
.XXX ± .010

ANGLES:
MACHINED ± .5°
LOCATING ± .5°
FORMED ± 2°
CHAMFERS ± 5°

DRILLED HOLE DIAMETERS:
.0135 - .125: +.004/-.001
.126 - .250: +.005/-.001
.251 - .500: +.006/-.001
.501 - .750: +.008/-.001
.751 - 1.000: +.010/-.001
1.001 - 2.000: +.012/-.001

DESIGNED	J. STEENSEN	4/1/2023
CHECKED	J. STEENSEN	4/1/2023
DRAWN	J. STEENSEN	4/1/2023

CC BY NC SA

OPEN HORNET
https://www.OpenHornet.com

TITLE
ASSY, APU ENG CRANK PANEL
LEFT CONSOLE

SIZE D | DWG NO OH4A5A2-1 | REV A

SCALE 1.5:1 | DO NOT SCALE DWG | SHEET 1/1